DocuSign Envelope ID: D5248AC9-FBB8-4416-AE8B-83019A409341

5/14/99

PROJECT REFERENCE NO.	SHEET NO.
17BP.14.R.180	2C-2

STATE OF
NORTH CAROLINA
DEPT. OF TRANSPORTATION
DIVISION OF HIGHWAYS
RALEIGH, N.C.

ENGLISH DETAIL DRAWING FOR

TYPE III - SHOP CURVED
STRUCTURE ANCHOR UNIT

SHEET 1 OF 1

TYPE III SC

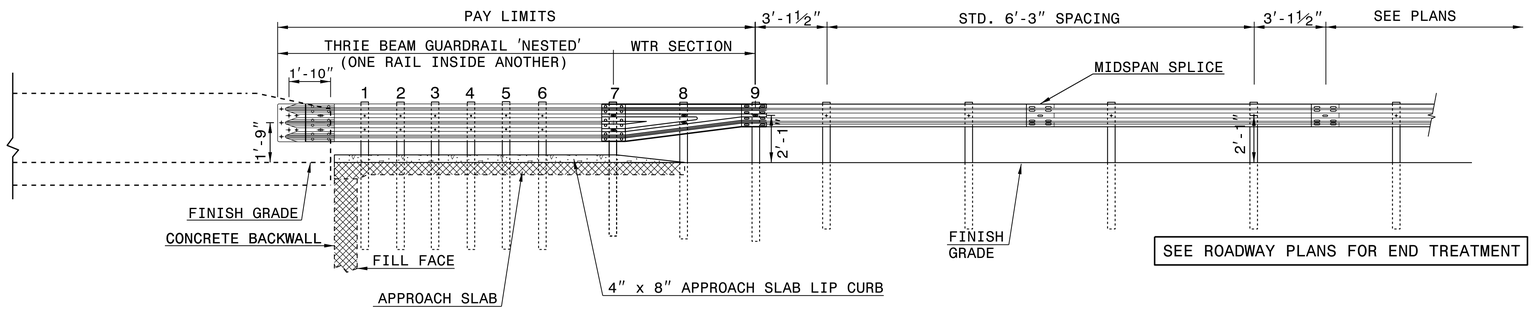

ELEVATION

NOTE:
**POST NOT REQUIRED FOR SKEW ANGLES GREATER THAN 150° OR LESS THAN 30° UNLESS OTHERWISE DIRECTED BY THE ENGINEER.
*THE DISTANCE FROM END OF BRIDGE RAIL TO CENTER LINE OF THE FIRST POST SHOULD BE 11½" IF CONCRETE BACKWALL IS NOT PRESENT.
-SHOULDER BERM GUTTER MUST BE INSTALLED TO THE LIMITS 8" x 4" LIP CURB IS SHOWN IF ANCHOR UNIT IS NOT ADJACENT TO AN APPROACH SLAB.
-MEASURE GUARDRAIL HEIGHT FROM THE TOP OF ADJACENT SURFACE (SHOULDER, BERM, OR GUTTER).
-USE NO STEEL POSTS WITHIN THE GUARDRAIL ANCHOR UNIT LIMITS.
-LAP JOINTS IN THE DIRECTION OF TRAFFIC FLOW.
-SEE STANDARD 862.03 SHEET 4 FOR POST SECTIONS 1 THRU 9.

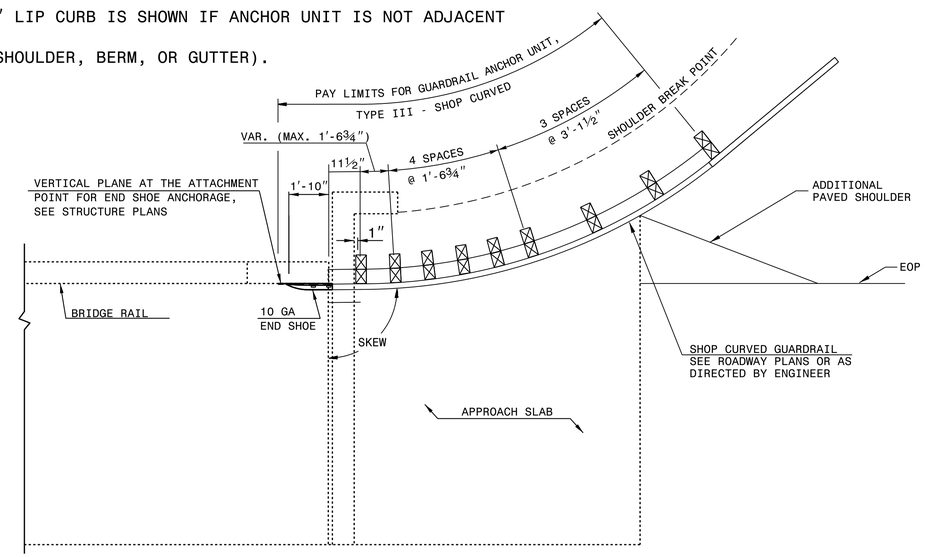

PLAN VIEW

GUARDRAIL ANCHOR UNIT, TYPE III - SHOP CURVED FOR ATTACHMENT TO RAIL ON BRIDGE

STATE OF
NORTH CAROLINA
DEPT. OF TRANSPORTATION
DIVISION OF HIGHWAYS
RALEIGH, N.C.

ENGLISH DETAIL DRAWING FOR

TYPE III - SHOP CURVED
STRUCTURE ANCHOR UNIT

SHEET 1 OF 1

TYPE III SC

DOCUMENT NOT CONSIDERED FINAL
UNLESS ALL SIGNATURES COMPLETED

NORTH CAROLINA PROFESSIONAL SEAL 022966 ENGINEER
Digitally signed by
Date: 2018.06.25 14:11:40 -04'00'
6/25/2018

CONTRACT STANDARDS AND DEVELOPMENT UNIT
Office 919-707-6950 FAX 919-250-4119

SEE PLATE FOR TITLE

ORIGINAL BY: E.E.Ward DATE: 4-4-02
MODIFIED BY: T.S.Spell DATE: 2-01-18
CHECKED BY: DATE:
FILE SPEC.: \jhowerton\guardrail\31inguardrail\typeiiisc.dgn

01-FEB-2018 09:19
S:\Contracts\Contracts\Special Details\jhowerton\Guardrail\31 inch Guardrail\type.iii.sc.dgn
jhowerton AT CSD-232595