DocuSign Envelope ID: D5248AC9-FBB8-4416-AE8B-83019A409341

5/14/99

PROJECT TYPICAL DETAILS

PROJECT REFERENCE NO.	SHEET NO.
17BP.14.R.180	UC-3C
DESIGNED BY: ARV	
DRAWN BY: ARV	
CHECKED BY: RLB	
APPROVED BY:	
REVISED:	
NORTH CAROLINA DEPARTMENT OF TRANSPORTATION	
UTILITIES ENGINEERING SEC. PHONE:(919)707-6690 FAX:(919)250-4151	UTILITY CONSTRUCTION PLANS ONLY

NORTH CAROLINA PROFESSIONAL SEAL 049764 ENGINEER ALEXANDER R. VANSON

ETRACKER 6/25/2021

UTILITY CONSTRUCTION

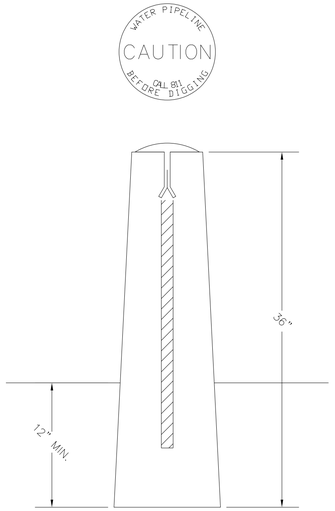

CONCRETE MARKER
CROSS SECTION

NOTES:

1. A PROFILE AND PLAN SHALL BE PROVIDED FROM ENTRY TO EXIT FOR EACH DIRECTIONAL BORE SECTION BY THE DIRECTIONAL BORE CONTRACTOR.
2. ALL BORE SECTIONS SHALL BE HYDROSTATICALLY TESTED, PER SPECIFICATIONS UPON COMPLETION OF INSTALLATION AND PRIOR TO CONNECTION TO THE MAIN WATER LINE.
3. LENGTH OF CROSSING, LOCATION OF INSPECTION/OBSERVATION EXCAVATION, NUMBER OF P.E. PIPE JOINTS, LOCATION OF BORE MACHINE, AUGER ENTRANCE LOCATION, AND TIE-IN POINTS ARE TO BE APPROVED BY TOWN OF TRYON PRIOR TO ANY START OF WORK OR ORDERING MATERIALS.
4. CONCRETE MARKERS SHALL BE PLACED AT BOTH THE ENTRY AND EXIT POINT OF ALL DIRECTIONAL BORES, REFERENCING THE TYPE OF UTILITY UNDERGROUND.
5. THE BORE DEVELOPED FOR THE LEAD IN END OF THE PIPE SHALL BE KEPT AT A MINIMUM DIAMETER FOR THE PIPE INSTALLATION. THE LEAD IN END SHALL BE PULLED THROUGH WITHOUT THE M.J. FLANGE ATTACHED FOR LARGER THAN 6" PIPE INSTALLATION. THE M.J. FLANGE FOR SAID LEAD IN END SHALL BE INSTALLED AFTER THE PIPE INSTALLATION WITH THE USE OF A SPLIT M.J. FLANGE.
6. IF BURIED OBSTRUCTIONS ARE LOCATED IN THE LENGTH OF THE DIRECTIONAL BORE, DIRECTIONAL BORE CONTRACTOR SHALL AVOID CONFLICT WITH THESE OBSTRUCTIONS BY GOING UNDER A MINIMUM OF 12" WITH PROPOSED PIPE UNLESS OTHERWISE SPECIFIED OR IDENTIFIED IN GENERAL NOTES ON SHEET UC-3, OR IN SPECIFICATIONS.

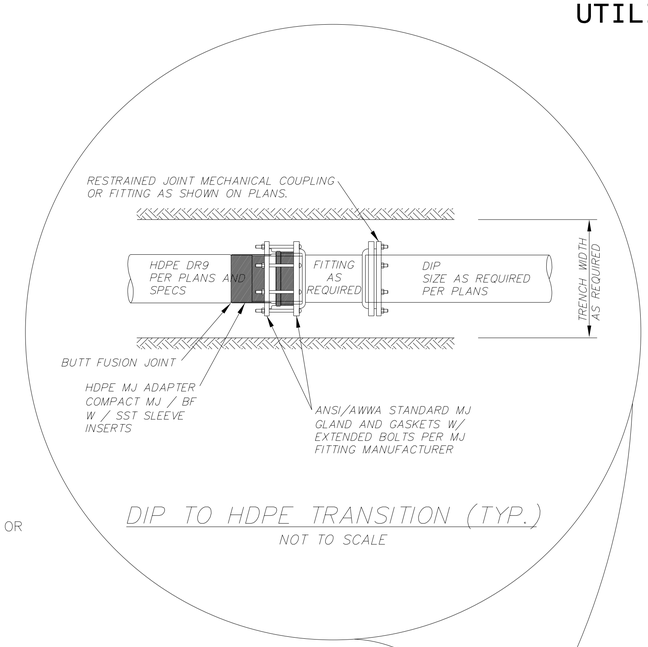

DIP TO HDPE TRANSITION (TYP.)

NOT TO SCALE

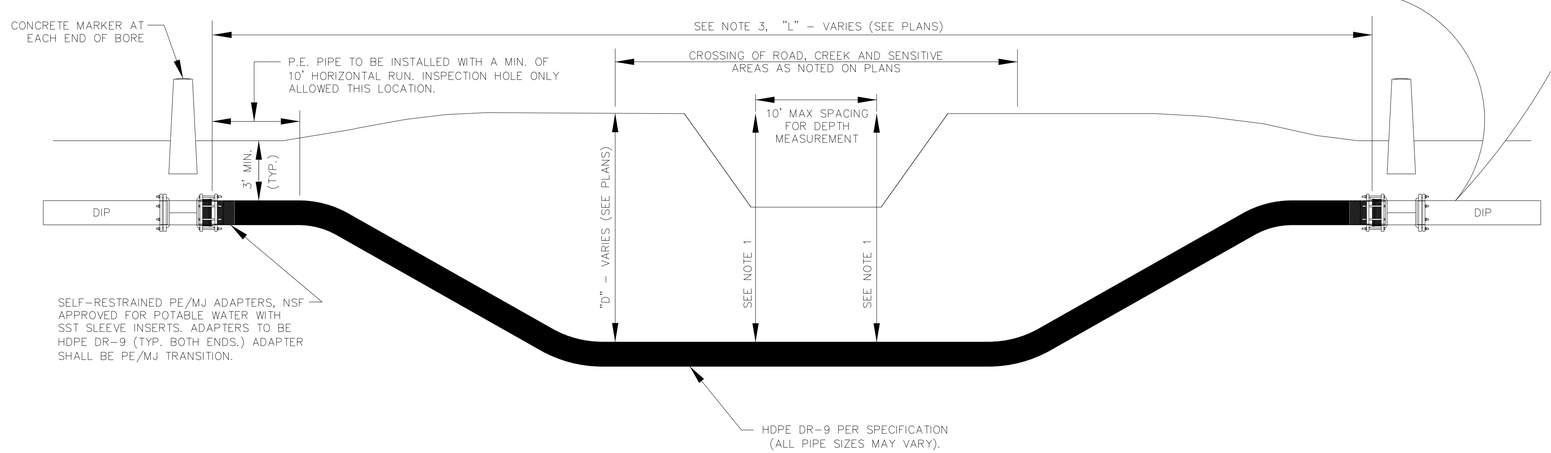

HORIZONTAL DIRECTIONAL DRILL PROFILE (TYP.)

NOT TO SCALE

23-MAR-2021 11:03
R:\Utilities\UC\Proj\Plan Sheets\SF-740063_UC_details.dgn
$$$$USERNAME$$$$