DocuSign Envelope ID: D5248AC9-FBB8-4416-AE8B-83019A409341

5/14/99

PROJECT TYPICAL DETAILS

PROJECT REFERENCE NO.	SHEET NO.
17BPJ4.R.J80	UC-3B
DESIGNED BY: ARV	
DRAWN BY: ARV	
CHECKED BY: RLB	
APPROVED BY:	
REVISED:	
NORTH CAROLINA DEPARTMENT OF TRANSPORTATION	
UTILITIES ENGINEERING SEC. PHONE:(919)707-6690 FAX:(919)250-4151	UTILITY CONSTRUCTION PLANS ONLY

NORTH CAROLINA PROFESSIONAL SEAL 049764 ENGINEER ALEXANDER R. VASSION
Docusigned by: ALEXANDER R. VASSION
6/25/2021

UTILITY CONSTRUCTION

NOTE: CONCRETE VALVE COLLAR REQUIRED ON ALL VALVES.

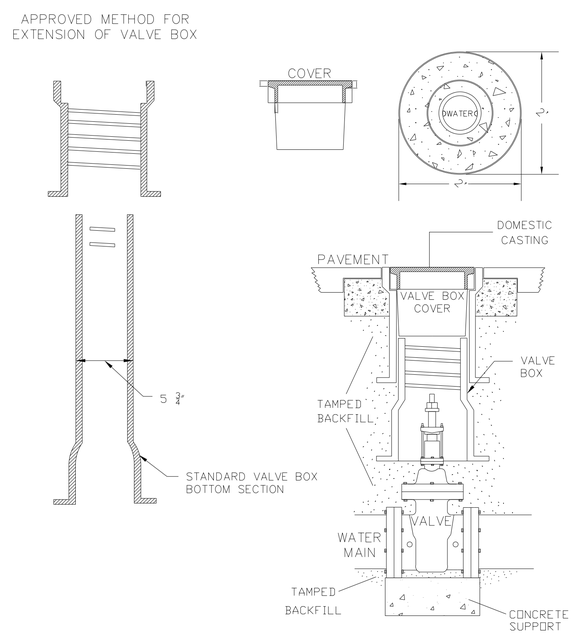

VALVE BOX DETAIL

NOT TO SCALE

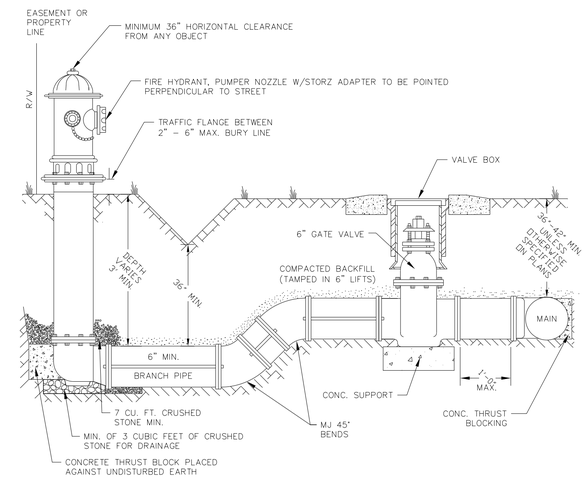

NOTES:
1. FIRE HYDRANT MANUFACTURER SHALL BE AS REQUIRED BY PROJECT SPECIFICATIONS.
2. FIRE HYDRANT SHALL BE INSTALLED USING HYDRANT TEE.
3. BRANCH PIPE SHALL BE DUCTILE IRON.
4. FIRE HYDRANTS WILL BE INSTALLED IN TRUE VERTICAL POSITION.
5. ALL JOINTS ON FIRE HYDRANT ASSEMBLIES SHALL BE RESTRAINED.
6. ALL FIRE HYDRANTS SHALL BE LOCATED WITHIN DEDICATED STREET RIGHT-OF-WAY OR PUBLICLY DEDICATED PERMANENT UTILITY EASEMENT TO THE TOWN OF TRYON.
7. INSTALL BOLLARD GUARD POST AS PER DRAWINGS OR CONDITIONS MANDATE.
8. HYDRANT SHALL NOT BE INSTALLED SO THAT THE FINISHED ELEVATION OF SURROUNDING AREA (INCLUDING LANDSCAPING, MULCH, GRAVEL, ETC.) IS ABOVE THE MAXIMUM BURY LINE OF THE HYDRANT.
9. MAXIMUM PERMISSIBLE EXTENSION LENGTH IS 2-FEET.
10. IF HYDRANT LEG IS LESS THAN 10-FEET LONG, THE HYDRANT SHALL BE RODDED BACK TO THE VALVE.

ANYTIME SITE WORK, CONSTRUCTION, ROAD WORK, OR ANY OTHER WORK CHANGES THE GRADE OF THE FIRE HYDRANT, THE CONTRACTOR IS RESPONSIBLE FOR ADJUSTING THE FIRE HYDRANT TO STAY WITHIN COMPLIANCE.

STANDARD FIRE HYDRANT ASSEMBLY SHOULDER/DITCH SECTION

NOT TO SCALE

23-MAR-2021 11:04
R:\Utilities\UC\Proj\Plan Sheets\SF-740063_UC_details.dgn
$$$$USERNAME$$$$